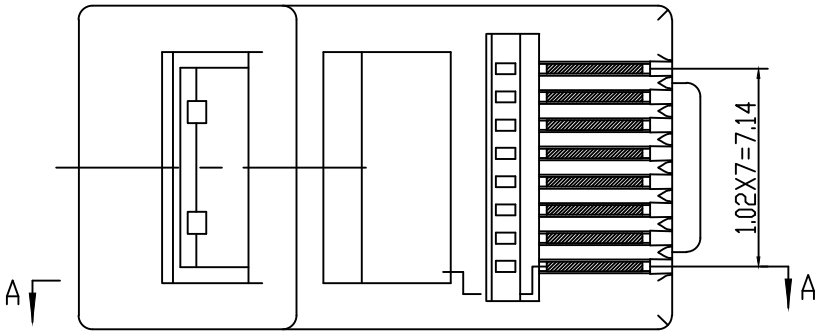

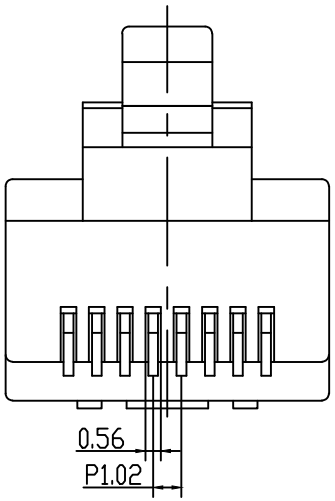

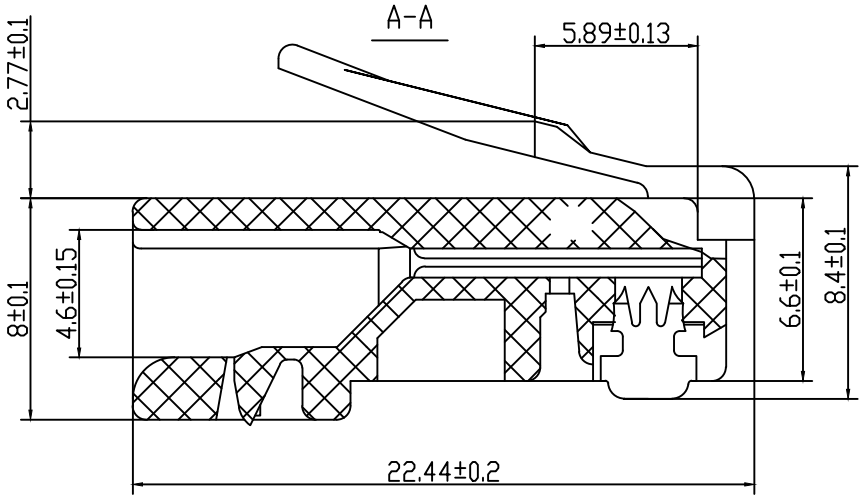

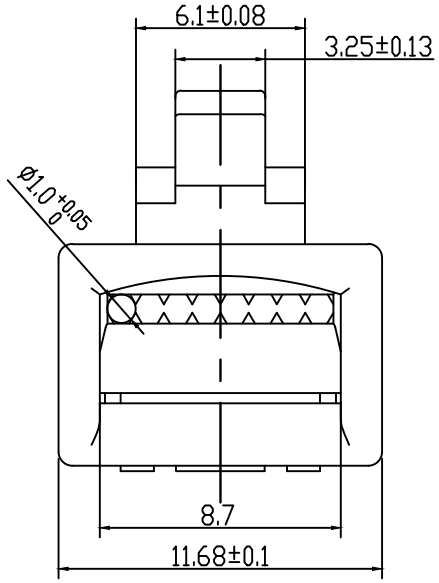

Specification:
1. Insulation resistance: 1000 megohms min;
2. Withstande voltage:1000V AC/minute;
3. Durability:1000 mating circles min;
4. Contacts: 3U Gold.

dLux		Tolerance: X. ±0.5 .X ±0.3 .XX ±0.10	SCALE: FREE	CUSTOMER:			Approved by
		Angle: X° ±3° .X° ±1°	UNIT: mm		CUSTOMER P/N:	COMPANY P/N: RJ45 BX10	Checked by
REV.	DESCRIPTION	DATE	REV.: 00	SHEET 1/1	DWG. No.:	TITLE: Connector RJ45 CAT5e	Design by